Flange Mtg. Two Bolts:A3HG37-FR01KK-E1C/E2C/U1C/U2C/J1C

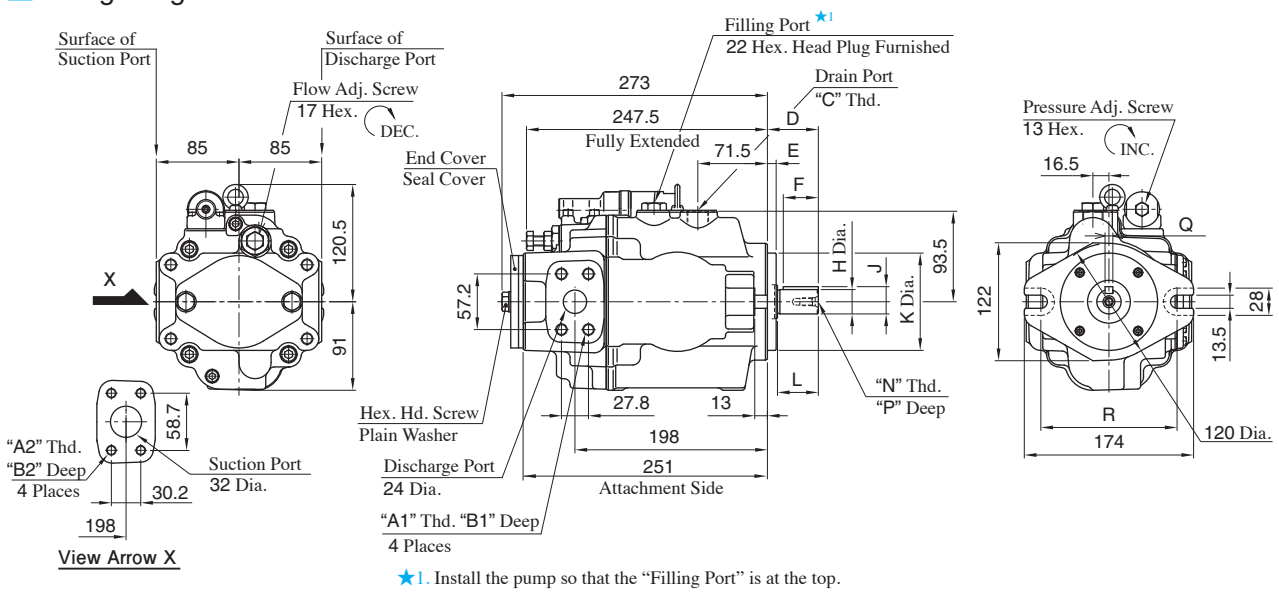

★1. Install the pump so that the "Filling Port" is at the top.

Model Numbers	A1	A2	B1	B2	C	D	E	F	H	J	K	L	N	P	Q	R	Mounting Flange	Connecting Port	Pipe Flange Threads
A3HG37-FR01KK-E1C/E2C	M12	M10	22	18	M22×1.5	52	9	36	$25^{+0.009}_{-0.004}$	$28^{+0.009}_{-0.294}$	$100^{0}_{-0.054}$	42	M8	19	$8^{0}_{-0.036}$	140	Conforms to ISO 3019-2	Metric	Metric
A3HG37-FR01KK-U1C	7/16-14 UNC		20		G 1/2	46	9.7	32	$25.4^{0}_{-0.05}$	$28.18^{0}_{-0.18}$	$101.6^{0}_{-0.05}$	38	1/4-20 UNC	16	$6.35^{+0.03}_{0}$	146	Conforms to ISO 3019-1	Unified	Unified
A3HG37-FR01KK-U2C	M12	M10	22	18	G 1/2	46	9.7	32	$25.4^{0}_{-0.05}$	$28.18^{0}_{-0.18}$	$101.6^{0}_{-0.05}$	38		16	$6.35^{+0.03}_{0}$	146	Conforms to ISO 3019-1	BSPP	Metric
A3HG37-FR01KK-J1C	M12	M10	22	18	G 1/2	46	9.7	32	$25.4^{0}_{-0.05}$	$28.18^{0}_{-0.18}$	$101.6^{0}_{-0.05}$	38		16	$6.35^{+0.03}_{0}$	146	Conforms to ISO 3019-1	Rc	Metric

Drain Port

For Port/Flange Code "U1/J1", Adapter and bonded seal are attached. After installing the bonded seal at the drain port tighten the adapter

Detail:A3HG37-FR01KK-E1C/E2C

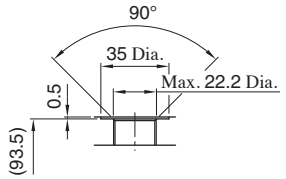

Detail of Drain Port ★2

★2. Drain port conforms to ISO 9974-1, metric threads.

Accessories:A3HG37-FR01KK-U1C

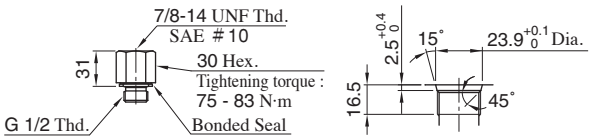

Adapter

Detail of Adapter Port ★3

★3. Adapter port conforms to SAE J 514, O-Ring seals.

Detail:A3HG37-FR01KK-U2C

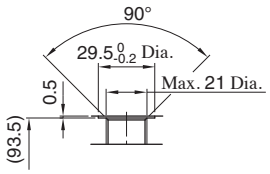

Detail of Drain Port ★4

★4. Drain port conforms to ISO 1179-1, BSPP threads.

Accessories:A3HG37-FR01KK-J1C

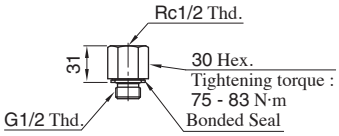

Adapter

Foot Mtg. Two Bolts:A3HG37-LR01KK-E1C/E2C/U1C/U2C/J1C

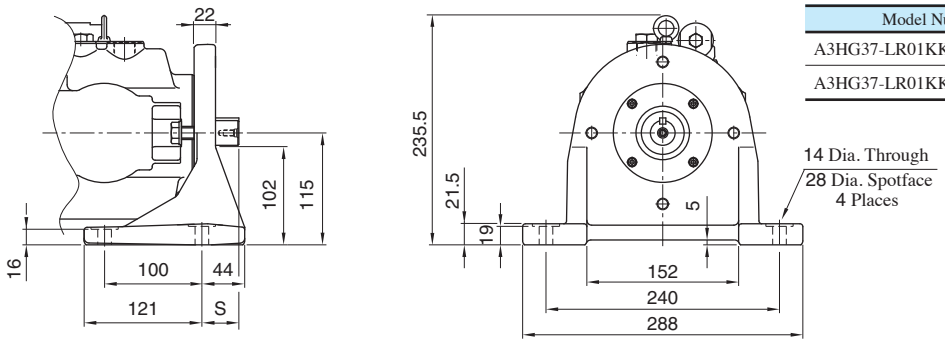

Model Numbers	S
A3HG37-LR01KK-E1C/E2C	44
A3HG37-LR01KK-U1C/U2C/J1C	38

● For other dimensions, refer to "Flange Mtg. Two Bolts".