Flange Mtg. Four Bolts:A3HG56-FR01KK-E1D/E2D/U1D/U2D/J1D

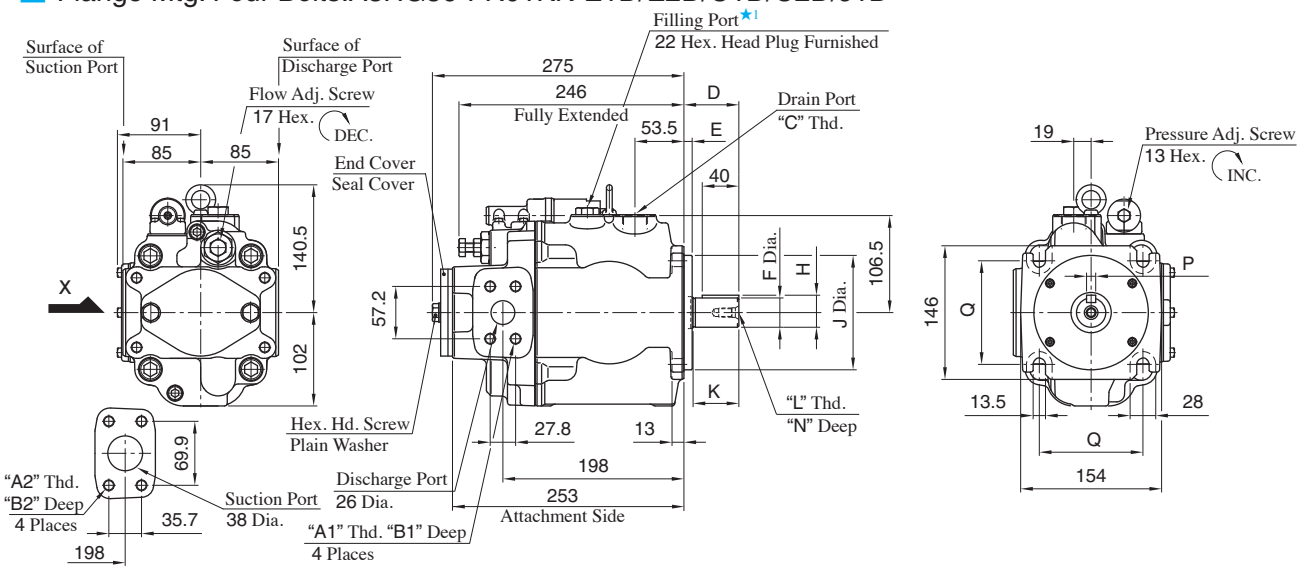

★1. Install the pump so that the "Filling Port" is at the top.

Model Numbers	A1	A2	B1	B2	C	D	E	F	H	J	K	L	N	P	Q	Mounting Flange	Connecting Port	Pipe Flange Threads
A3HG56-FR01KK-E1D/E2D	M12	M12	22	22	M27X2	60	9	$32^{+0.018}_{+0.002}$	$35^{+0.018}_{-0.288}$	$125^{0}_{-0.063}$	50	M10	22	$10^{0}_{-0.036}$	113.2	Conforms to ISO 3019-2	Metric	Metric
A3HG56-FR01KK-U1D	7/16-14 UNC	1/2-13UNC	20	21	G 3/4	56	12.7	$31.75^{0}_{-0.05}$	$35.32^{0}_{-0.18}$	$127^{0}_{-0.05}$	48	5/16-18 UNC	19	$7.94^{+0.03}_{0}$	114.5	Conforms to ISO 3019-1	Unified	Unified
A3HG56-FR01KK-U2D	M12	M12	22	22	G 3/4	56	12.7	$31.75^{0}_{-0.05}$	$35.32^{0}_{-0.18}$	$127^{0}_{-0.05}$	48		19	$7.94^{+0.03}_{0}$	114.5	Conforms to ISO 3019-1	BSPP	Metric
A3HG56-FR01KK-J1D	M12	M12	22	22	G 3/4	56	12.7	$31.75^{0}_{-0.05}$	$35.32^{0}_{-0.18}$	$127^{0}_{-0.05}$	48		19	$7.94^{+0.03}_{0}$	114.5	Conforms to ISO 3019-1	Rc	Metric

Drain Port

For Port/Flange Code "U1/J1", Adapter and bonded seal are attached. After installing the bonded seal at the drain port tighten the adapter

Detail:A3HG56-FR01KK-E1D/E2D

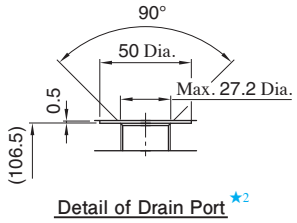

★2. Drain port conforms to ISO 9974-1, metric threads.

Accessories:A3HG56-FR01KK-U1D

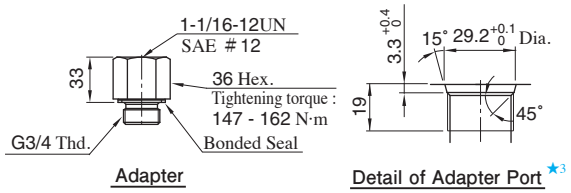

★3. Adapter port conforms to SAE J 514, O-Ring seals.

Detail:A3HG56-FR01KK-U2D

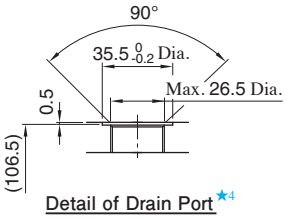

★4. Drain port conforms to ISO 1179-1, BSPP threads.

Accessories:A3HG56-FR01KK-J1D

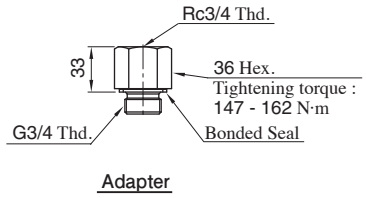

Foot Mtg. Four Bolts:A3HG56-LR01KK-E1D/E2D/U1D/U2D/J1D

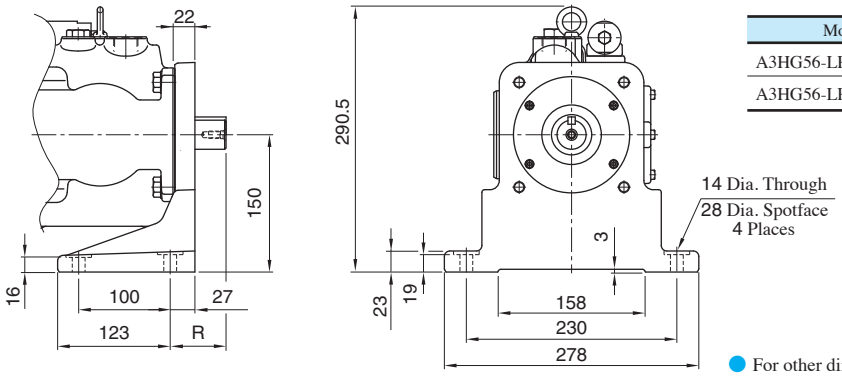

Model Numbers	R
A3HG56-LR01KK-E1D/E2D	65
A3HG56-LR01KK-U1D/U2D/J1D	61

● For other dimensions, refer to "Flange Mtg. Four Bolts".