Flange Mtg.:A3HG71-FR14K-E1D/E2D/U1D/U2D/J1D

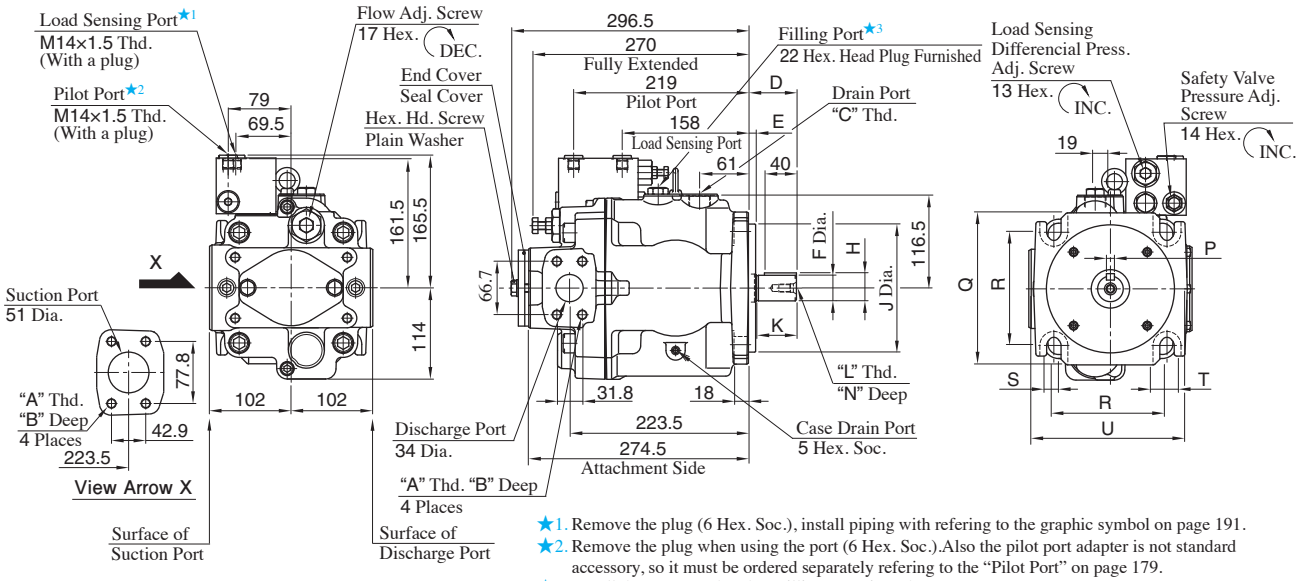

★1. Remove the plug (6 Hex. Soc.), install piping with refering to the graphic symbol on page 191.
★2. Remove the plug when using the port (6 Hex. Soc.).Also the pilot port adapter is not standard accessory, so it must be ordered separately refering to the "Pilot Port" on page 179.
★3. Install the pump so that the "Filling Port" is at the top.

Model Numbers	A	B	C	D	E	F	H	J	K	L	N	P	Q	R	S	T	U	Mounting Flange	Connecting Port	Pipe Flange Threads
A3HG71-FR14K-E1D/E2D	M12	22	M27×2	60	9	$32^{+0.018}_{+0.002}$	$35^{+0.018}_{-0.288}$	$160^{0}_{-0.063}$	50	M10	22	$10^{0}_{-0.036}$	190	141.4	18	35	192	Conforms to ISO 3019-2	Metric	Metric
A3HG71-FR14K-U1D	1/2-13 UNC	21	G 3/4	56	12.7	$31.75^{0}_{-0.05}$	$35.32^{0}_{-0.18}$	$127^{0}_{-0.05}$	48	5/16-18 UNC	19	$7.94^{+0.03}_{0}$	143	114.5	13.5	28	155	Conforms to ISO 3019-1	Unified	Unified
A3HG71-FR14K-U2D	M12	22	G 3/4	56	12.7	$31.75^{0}_{-0.05}$	$35.32^{0}_{-0.18}$	$127^{0}_{-0.05}$	48		19	$7.94^{+0.03}_{0}$	143	114.5	13.5	28	155	Conforms to ISO 3019-1	BSPP	Metric
A3HG71-FR14K-J1D	M12	22	G 3/4	56	12.7	$31.75^{0}_{-0.05}$	$35.32^{0}_{-0.18}$	$127^{0}_{-0.05}$	48		19	$7.94^{+0.03}_{0}$	143	114.5	13.5	28	155	Conforms to ISO 3019-1	Rc	Metric

Flange Mtg.:A3HG100-FR14K-E1D/E2D/U1D/U2D/J1D

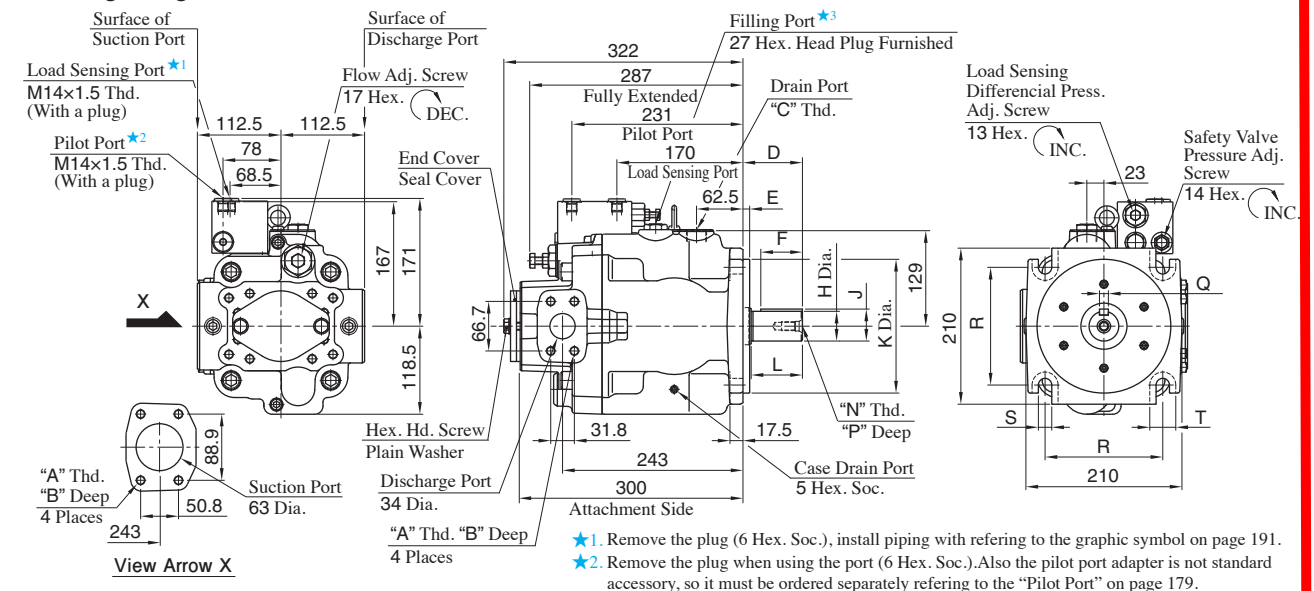

★1. Remove the plug (6 Hex. Soc.), install piping with refering to the graphic symbol on page 191.
★2. Remove the plug when using the port (6 Hex. Soc.).Also the pilot port adapter is not standard accessory, so it must be ordered separately refering to the "Pilot Port" on page 179.
★3. Install the pump so that the "Filling Port" is at the top.

Model Numbers	A	B	C	D	E	F	H	J	K	L	N	P	Q	R	S	T	Mounting Flange	Connecting Port	Pipe Flange Threads
A3HG100-FR14K-E1D/E2D	M12	22	M27×2	80	9	56	$40^{+0.018}_{+0.002}$	$43^{+0.018}_{-0.288}$	$180^{0}_{-0.063}$	70	M12	28	$12^{0}_{-0.043}$	158.4	18	35	Conforms to ISO 3019-2	Metric	Metric
A3HG100-FR14K-U1D	1/2-13 UNC	21	G 3/4	62	12.7	45	$38.1^{0}_{-0.05}$	$42.36^{0}_{-0.18}$	$152.4^{0}_{-0.05}$	54	7/16-14 UNC	28	$9.53^{+0.03}_{0}$	161.6	21.5	39	Conforms to ISO 3019-1	Unified	Unified
A3HG100-FR14K-U2D	M12	22	G 3/4	62	12.7	45	$38.1^{0}_{-0.05}$	$42.36^{0}_{-0.18}$	$152.4^{0}_{-0.05}$	54		28	$9.53^{+0.03}_{0}$	161.6	21.5	39	Conforms to ISO 3019-1	BSPP	Metric
A3HG100-FR14K-J1D	M12	22	G 3/4	62	12.7	45	$38.1^{0}_{-0.05}$	$42.36^{0}_{-0.18}$	$152.4^{0}_{-0.05}$	54		28	$9.53^{+0.03}_{0}$	161.6	21.5	39	Conforms to ISO 3019-1	Rc	Metric

Load Sensing Port/Pilot Port

Load Sensing Port is common to that of Pilot Port(except the height dimension from the center of the pump).
Refer to page 179 for the dimensions of Pilot Port.

Drain Port

Drain Port is common to that of pressure compensator model.Refer to page 172 or 173 for the dimensions of Drain Port.

Foot Mtg.:A3HG71-LR14K-E1D/E2D/U1D/U2D/J1D, A3HG100-LR14K-E1D/E2D/U1D/U2D/J1D

Mounting bracket is common to that of pressure compensator model (except max height dimension).
Refer to page 172 and 173 for the dimensions of mounting bracket.