RBG-06-✻-10/1080/1090

Model Numbers	"A" Thd.
RBG-06-✻-10	Rc 3/8
RBG-06-✻-1080	3/8 BSP.F
RBG-06-✻-1090	3/8 NPT

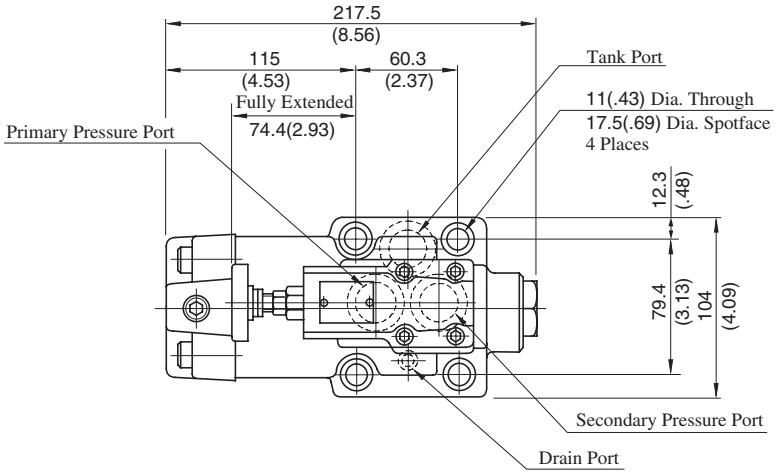

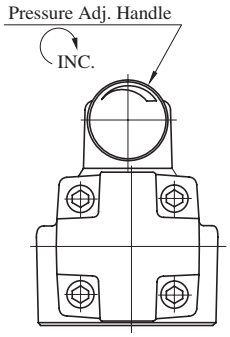

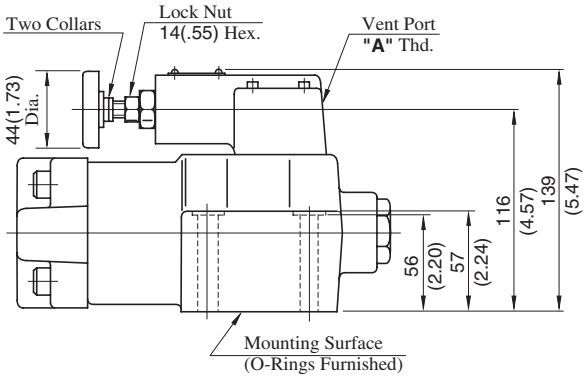

DIMENSIONS IN MILLIMETRES (INCHES)

Sub-plate : RBGM-06/06X-10/1080/1090

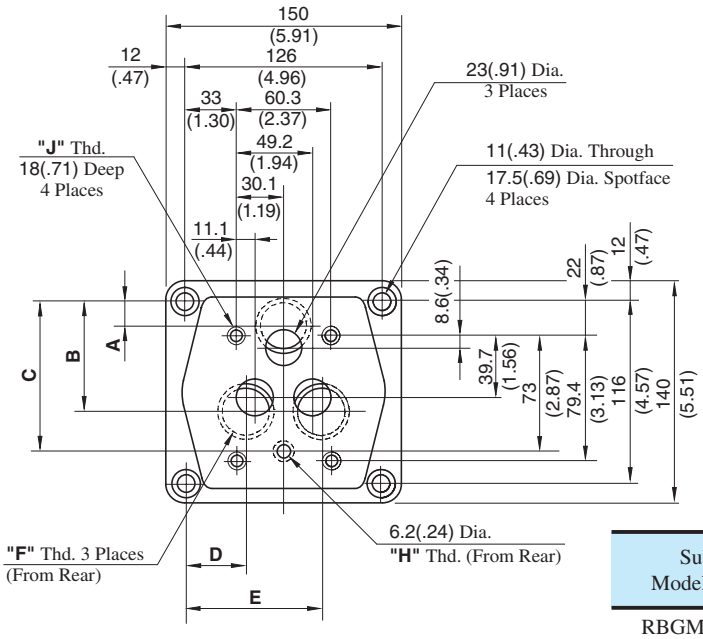

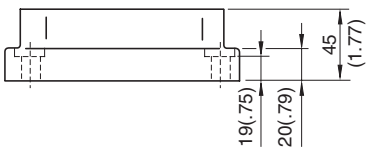

Model Numbers	Dimensions mm (Inches)				
	A	B	C	D	E
RBGM-06	20.7 (.81)	65.7 (2.59)	95 (3.74)	37.1 (1.46)	89.1 (3.51)
RBGM-06X	20.4 (0.80)	69.7 (2.74)	98.4 (3.87)	32.5 (1.28)	93.8 (3.69)

Sub-plate Model Numbers	Thread Size		
	"F" Thd.	"H" Thd.	"J" Thd.
RBGM-06-10	Rc 3/4	Rc 1/4	M10
RBGM-06-1080	3/4 BSP.F	1/4 BSP.F	
RBGM-06-1090	3/4 NPT	1/4 NPT	3/8-16 UNC
RBGM-06X-10	Rc 1	Rc 1/4	M10
RBGM-06X-1080	1 BSP.F	1/4 BSP.F	
RBGM-06X-1090	1 NPT	1/4 NPT	3/8-16 UNC